16-3000-103

SERVICE MANUAL FOR K7000

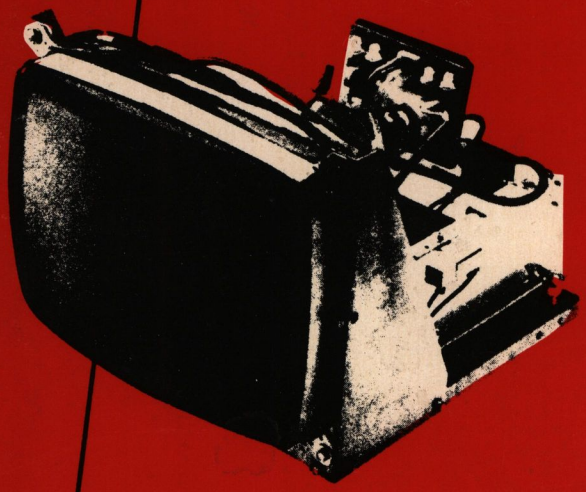

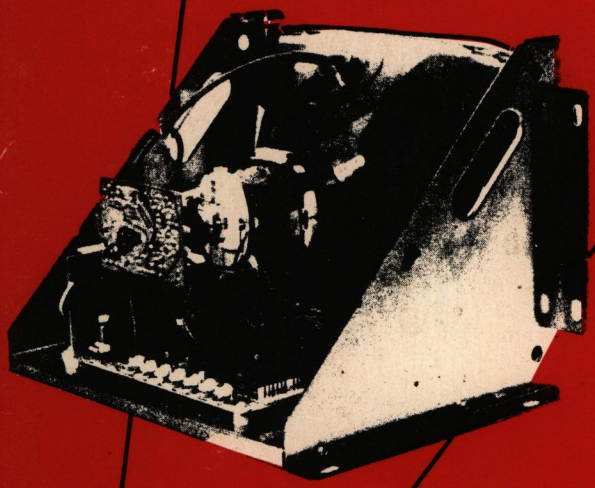

wells-gardner electronics corporation

2701 N. KILDARE, CHICAGO, IL 60639
312/252-8220 TELEX: 25-3286
FAX: 312-252-8072

SERVING CONSUMER AND INDUSTRIAL ELECTRONICS FOR MORE THAN 60 YEARS

COLOR SPECIFICATIONS

CRT

- **From 9" to 25"** diagonal measure
- **P22 phosphor**
- **Polished faceplate standard:** variety of optional faceplates and transmittances available.
- **Stripe trio spacings (standard):** 0.62 mm (9"), 0.66 mm (13"), 0.82 mm (19"), 0.82 mm (25").
- Optional finer pitches available.

INPUT SIGNALS

- **Video:** RGB analog, 1v to 5v peak-to-peak (adjustable with contrast control), 4.7k ohm input impedance, 40 usec to 50 usec active video.

  Optional inputs available:
- Negative video
- RGB analog 0-0.75v, 75 ohm input impedance
- Composite video (NTSC)
- Both composite video and RGB analog: Both signal sources can be connected to the monitor at the same time. Monitor display can be switched from one to the other, at anytime at pixel or vertical frame rate.
- **Sync:** TTL positive or negative going, separate or composite. Input impedance: 20K ohms for positive going sync; 12K ohms for negative going sync.

HORIZONTAL SCAN

- **Width:** Adjustable with just one coil to accommodate active video from 40 usec to 50 usec.
- **Frequency:** 15.1 kHz to 16.8 kHz standard; higher scan frequencies avaliable.
- **Linearity:** ± 5%

PICTURE SIZE REGULATION

- 2%

VERTICAL SCAN

- **Frequency:** 47 Hz to 63 Hz
- **Linearity:** ± 5%

GEOMETRIC DISTORTION

- ± 2% (max).

VIDEO CHARACTERISTICS

- **Bandwidth (-3 db):** 12 MHz typical
- **Rise Time:** Less than 50 nanoseconds
- **Overshoot (max):** 5%

MECHANICAL

- The 19" monitor is also available in universal mount brackets. The monitor can be mounted in the user's cabinet horizontally or vertically. Contact your sales representative for details.
- The standard Prismatic-25™ 25" monitor is available as a kit - without a frame. Custom frames can be furnished.
- The standard Prismatic-9™ 9" monitor is available as a kit - without a frame: Also available in chassis form - adaptable to individual customer requirements.
- Contact your sales representative for details.

USER ADJUSTABLE CONTROLS AND ADJUSTMENTS

- Brightness, Contrast, Horizontal Hold, Horizontal Size, Horizontal Raster Position, Horizontal Video Position, Vertical Hold, Vertical Size, Vertical Raster Position, Focus. Custom Control Location available.

POWER INPUT

- 120 VAC +10% -15%, 50-60 Hz, 85W (max). Isolation transformer required; furnished with monitor as an option.

ENVIRONMENTAL CONDITIONS

- Operating temperature 0° to 55°C. Complies with U.L., C.S.A., and D.H.H.S. radiation performance standard (composite video).

RESOLUTIONS

	• Standard CRT	• Fine Pitch CRT
9"	280 Pixels x 240 Lines	410 Pixels x 240 Lines
13"	400 Pixels x 240 Lines	640 Pixels x 240 Lines
19"	400 Pixels x 240 Lines	640 Pixels x 240 Lines
25"	560 Pixels x 240 Lines	N. A.

Copyright © 1987.
Wells-Gardner Electronics Corporation.
All rights reserved.

****** SPECIFICATIONS ARE SUBJECT TO CHANGE IN ORDER TO ASSURE YOU THE LATEST IN DISPLAY TECHNOLOGY.******

THIS MANUAL APPLIES TO THOSE MONITORS WITH SERIAL NUMBERS OF 576001 AND ABOVE.

WARNINGS

1. Power Up Warning–

An isolation transformer must be used between the AC supply and the AC plug of the monitor before servicing, testing, or operating the monitor since the chassis and the heat sink are directly connected to one side of the AC line which could present a shock hazard.

Before servicing is performed, read all the precautions labelled on the CRT and chassis.

2. X-RAY RADIATION WARNING NOTICE

WARNING: PARTS WHICH INFLUENCE X-RAY RADIATION IN HORIZONTAL DEFLECTION, HIGH VOLTAGE CIRCUITS AND PICTURE TUBE ETC. ARE INDICATED BY (★) IN THE PARTS LIST FOR REPLACEMENT PURPOSES. USE ONLY THE TYPE SHOWN IN THE PARTS LIST.

3. High Voltage–

This monitor contains HIGH VOLTAGES derived from power supplies capable of delivering LETHAL quantities of energy. Do not attempt to service until all precautions necessary for working on HIGH VOLTAGE equipment have been observed.

4. CRT Handling–

Care must be taken not to bump or scratch the picture tube as this may cause the picture tube to implode resulting in personal injury. Shatter proof goggles must be worn when handling the CRT. High voltage must be completely discharged before handling. Do not handle the CRT by the neck.

5. PRODUCT SAFETY NOTICE

WARNING: FOR CONTINUED SAFETY REPLACE SAFETY CRITICAL COMPONENTS ONLY WITH MANUFACTURER RECOMMENDED PARTS. THESE PARTS ARE IDENTIFIED BY SHADING AND BY (△) ON THE SCHEMATIC DIAGRAM.

AVERTISSEMENT: POUR MAINTENIR LE DEGRE DE SECURITE DE L'APPAREIL NE REMPLACER LES COMPOSANTS DONT LE FONCTIONNEMENT EST CRITIQUE POUR LA SECURITE QUE PAR DES PIECES RECOMMANDEES PAR LE FABRICANT.

For replacement purposes, use the same type or specified type of wire and cable, assuring the positioning of the wires is followed (especially for H.V. and power supply circuits). Use of alternative wiring or positioning could result in damage to the monitor or in a shock or fire hazard.

AC CONNECTORS AND TERMINALS

ALL MONITORS EXCEPT THOSE WITH MODEL NUMBERS ENDING WITH 2 OR 6:

WELLS-GARDNER END	W.G. Part No.	Molex Part No.
Plug	6A0396-001	19-09-2029
Pins Male	30X0759-001	02-09-2101
USERS' END		
Receptacle		19-09-1029
Pins, Female		02-09-1101*
		or 02-09-1116*

MODEL NUMBERS ENDING WITH 2:

WELLS-GARDNER END	W.G. Part No.	Molex Part No.
Plug	6A0376-002	03-09-2022
Pins, Male	30X0759-001	02-09-2101
USERS' END		
Receptacle		03-09-1022
Pins, Female		02-09-1101*
		or 02-09-1116*

MODELS NUMBERS ENDING WITH 6:

WELLS-GARDNER END	W.G. Part No.	AMP Part No.
Receptacle	6A0402-001	350778-1
Pins, Male	30X0761-001	350538-1
USERS' END		
Plug		350777-1
Pins, Female		350537-1 **
		or 350851-1 **

*-1101 is used for 20-14 AWG wire and insulation diameter range 0.065"-0.160"

-1116 is used for 22-18 AWG wire and insulation diameter range 0.060"-0.120"

** 350537-1 is used for 20-14 AWG wire and insulation diameter range 0.130"-0.200"

350851-1 is used for 24-18 AWG wire and insulation diameter range 0.040"-0.100"

USER ADJUSTMENTS

1. BRIGHTNESS CONTROL VR6

This control has been preset at the factory. However, when the video signal is applied to the monitor, a slight adjustment may be desired. Adjust this control such that the illumination is just barely extinguished from portions of the display which should be black.

2. CONTRAST CONTROL VR7

Adjust the contrast control for the desired picture intensity.

3. FOCUS CONTROL

Adjust the focus control, located on the high voltage unit (T1), for maximum over-all definition and fine picture detail.

4. HORIZONTAL HOLD CONTROL VR2

With the monitor being driven with the display signal, connect one jumper between TP1 and TP2 and another jumper between TP3 and TP4. Adjust the horizontal hold control until the picture stops sliding horizontally. Remove the jumpers. Do not use the horizontal hold control for horizontal centering. (See #5).

NOTE: If the sync signal is composite, use the horizontal sync input of the same polarity as the composite sync signal.

5. HORIZONTAL VIDEO SHIFT CONTROL VR1

Use this control to center the picture horizontally.

6. HORIZONTAL RASTER POSITION ADJUSTMENT

If the picture is off center horizontally (long dimension of picture tube), some compensation can be made by moving the horizontal raster position adjustment jumper either to positions "R" or "L".

7. HORIZONTAL SIZE COIL L1

The horizontal size coil is a hexagonal tuning tool adjustment. This control must be adjusted slowly, if necessary, until the picture or test pattern attains the correct horizontal proportions.

8. VERTICAL HOLD CONTROL VR5

Adjust this control until the picture stops rolling and it locks in vertically.

9. 50-60 Hz CONTROL VR9

This control is used to limit the range of vertical size. This control is preset at the factory and should not require readjustment unless the vertical size control or vertical hold control are readjusted from their original factory setttings. In order to set this control, first adjust the vertical size control so that the picture is slightly larger than desired. Turn VR9 so that any vertical foldover which may be present will disappear. If the monitor is to be operated alternately at more than one vertical frequency, then perform this adjustment at the higher frequency.

10. VERTICAL SIZE CONTROL

This control must be adjusted slowly, if necessary, until the picture or test pattern attains the correct vertical proportions.

11. VERTICAL RASTER POSITION CONTROL VR3

If the video is off center vertically, (short dimension of picture tube) some compensation can be made by turning the vertical raster position control.

12. CUT OFF AND DRIVE CONTROLS ON NECK BOARD VR201, VR202, VR203, VR204, VR205, VR206.

These controls have been preset at the proper gray scale. Before adjusting any of these controls, refer to Troubleshooting Note 4 and to the White Balance procedure.

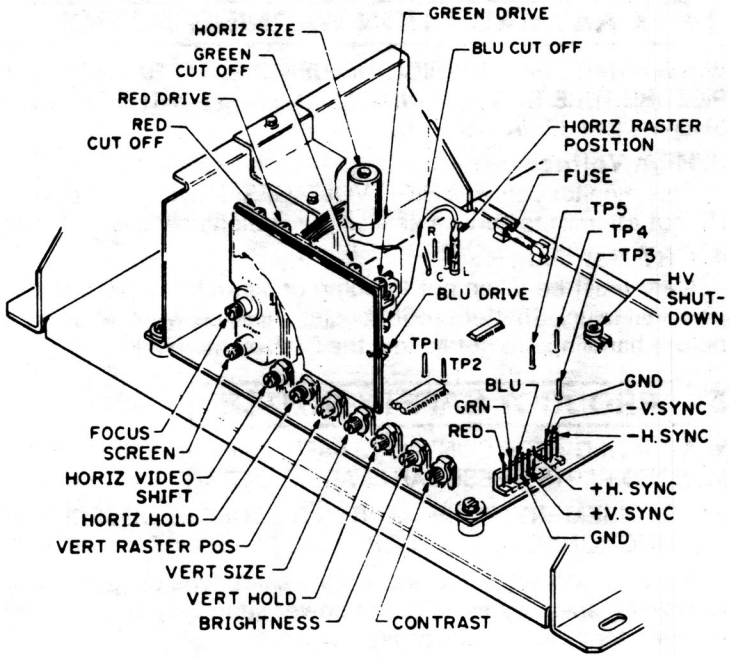

FIG. 1A

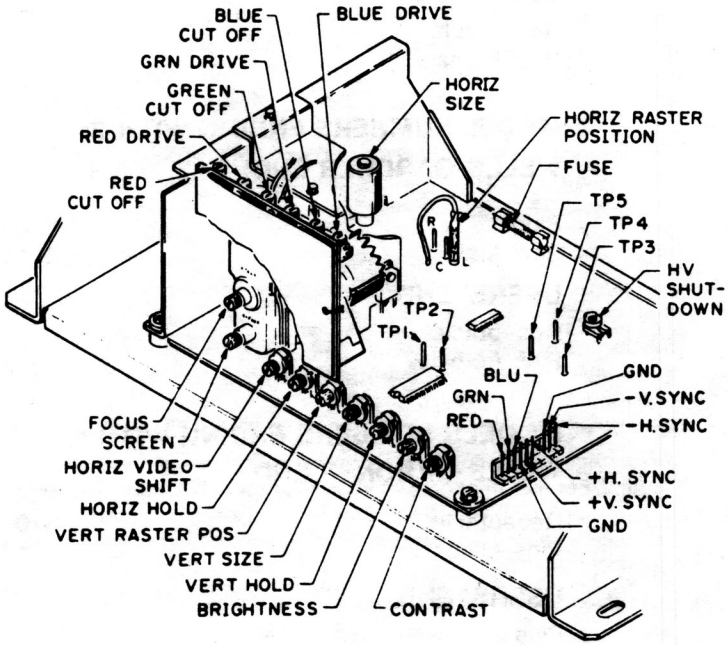

FIG. 1B

INSTALLATION AND SERVICE INSTRUCTIONS

NOTE:
All of the following procedures have been performed at the factory and should require no further attention. If the monitor is serviced for any reason, it should be observed afterward to determine whether any of these procedures need to be performed again.

OUTLINE OF CONVERGENCE AND SET-UP PROCEDURE

DEGAUSSING: Demagnetize the shadow mask and all surrounding metal parts with an external degaussing coil.
PURITY: Adjust the purity magnets and the yoke position.
STATIC CONVERGENCE: Converge Red and Blue on Green in the center of the screen.
DYNAMIC CONVERGENCE: Converge Red and Blue at the edges of the screen.
WHITE BALANCE: Set Gray and White brightness tracking.

NOTE: Purity and convergence adjustment interact.

DEGAUSSING

The monitor is equipped with an automatic degaussing circuit. However, if the CRT shadow mask has become excessively magnetized, it may be necessary to degauss it with a manual coil. Do not switch the coil OFF while the raster shows any effect from the coil.

COLOR PURITY ADJUSTMENT

1 For best results, it is recommended that the purity adjustment be made in the final monitor location. If the monitor will be moved, perform this adjustment with it facing west or east. The monitor must have been operating 15 minutes prior to this procedure.

2 On picture tubes with a 22.5 mm neck diameter, set the ring assembly on the CRT neck with the center line of the purity ring-pair over the gap between grids No. 5 and 6. See Fig. 2A [For picture tubes with a 29 mm neck, use the gap between grids No. 3 and 4. Fig. 2B.]

3 Make certain that the magnetic ring-pairs are in their correct starting positions before beginning this procedure. The correct starting position for the purity ring-pair is not necessarily the one shown in Figure 2. The correct starting position will vary from ring assemblies from one manufacturer to another. It will be necessary to determine the correct starting position–also known as the zero correction position.

Figure 2 shows a ring assembly in which each of the rings of the purity ring-pair has two tabs–one long and one short. With some ring assemblies of this type, the zero correction position is with the long tab of one ring aligned with the short tab of the other ring. On other ring assemblies of this type, the zero correction position is with the long tab of one ring aligned with the long tab of the other ring. The way to determine which is which is by trying one of these orientations and then rotating the two rings together, as a pair, without changing their orientation with respect to each other. If this rotation of the ring-pair causes no change in the purity, then it is the zero correction position. If the purity does change, then try the other orientation.

A third type of ring assembly has only one tab on each of the two purity rings. The zero correction position for this type of assembly is with the tabs of the two purity rings aligned with each other and pointing up toward the anode contact of the CRT.

The correct starting positions for the other ring pairs are as shown in Figure 2. For the other type of ring assembly (not shown), the correct starting position for the other two ring-pairs is with all of the tabs aligned with each other and pointing up, toward the anode contact of the CRT.

4 Vertical raster position control must be at the center of its rotation.

5 Remove the R-G-B signal from the monitor.

6 Turn the Green Cut off Control (VR203) on the Neck Board fully CW. (See Fig. 1).

7 Turn the Red and Blue Cut off Controls (VR201 & VR205) fully CCW.

8 Pull the Deflection Yoke backward so that the Green belt will appear. (See Fig. 4).

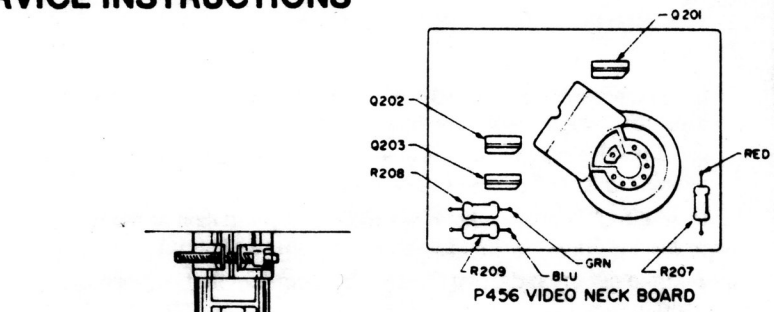

P456 VIDEO NECK BOARD

FIG. 3A

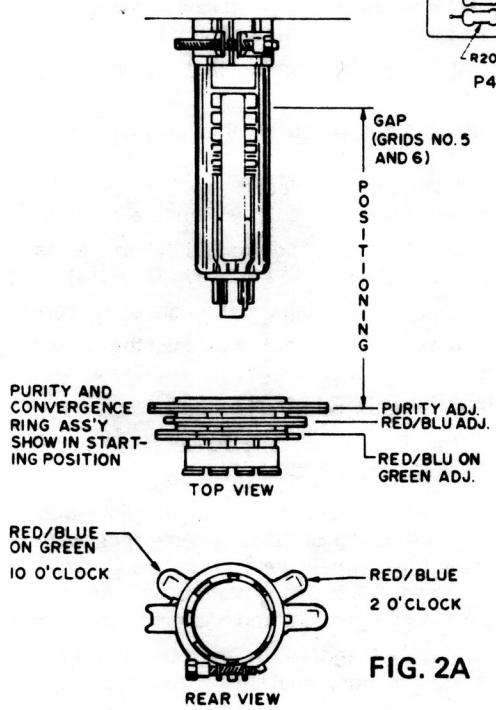

FIG. 2A

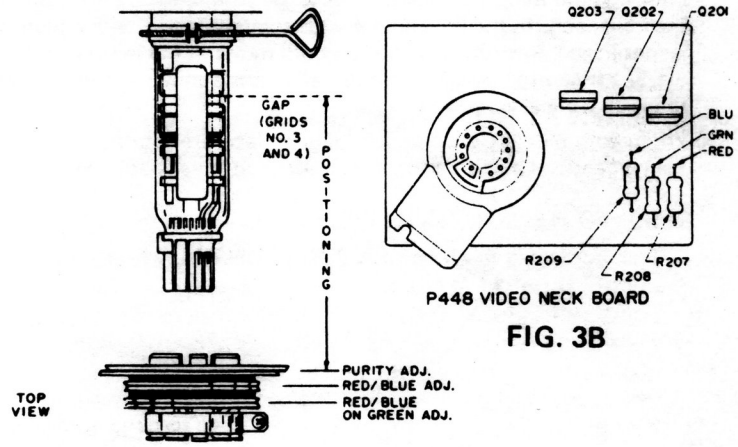

P448 VIDEO NECK BOARD

FIG. 3B

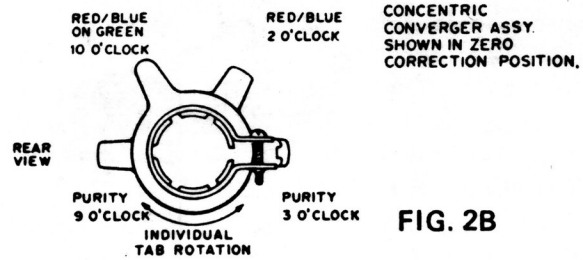

FIG. 2B

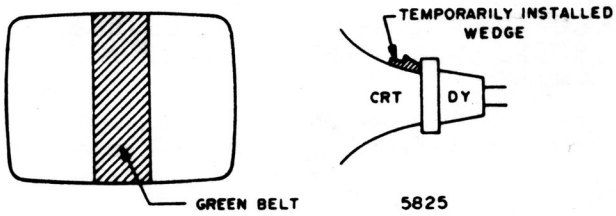

FIG. 4

9 Decrease the horizontal width of the raster, if necessary, in order to be able to see the right and left edges of the raster.

10 Move the two Purity Magnets with respect to each other in order to center the Green belt on the raster horizontally.

11 Push the Deflection Yoke forward gradually and fix it at the place where the Green screen becomes uniform throughout.

12 Turn the cut off and Drive Controls and confirm that each color is uniform.

13 If the color is not uniform, re-adjust it, moving the Purity Magnets slightly.

14 Turn all three cut off controls fully counterclockwise (CCW). Slowly turn up (CW) the Red cutoff control until a Red raster is just barely visible.

15 Slowly turn up the Green and Blue cutoff controls such that their associated colors, mixing with the Red, results in a White or Gray raster.

16 Confirm that the white or gray color is uniform throughout the screen.

17 Insert a wedge temporarily as shown in Fig. 4 and adjust the angle of the Deflection Yoke.

STATIC CONVERGENCE ADJUSTMENT

4-Pole Magnets and 6-Pole Magnets are for static convergence.

1 A cross hatch signal should be connected to the monitor.

2 A pair of 4-Pole Convergence Magnets is provided and adjusted to converge the blue and red beams (See Fig. 6). When the Pole opens to the left and right 45° symmetrically, the magnetic field maximizes. Red and blue beams move to the left and right (See Fig. 5). Variation of the angle between the tabs adjusts the convergence of red and blue vertical lines.

3 When both 4-Pole Convergence Magnet Tabs are rotated as a pair, the convergence of the red and blue horizontal lines is adjusted.

4 A pair of 6-Pole Convergence Magnets is also provided and adjusted to converge the magenta (red + blue) to green beams (See Fig. 6). When the Pole opens to the left and right 30° symmetrically, the magnetic field is maximized. Red and blue beams both move to the left and right (See Fig. 5). Variation of the opening angle adjusts the convergence of magenta to green vertical lines.

5 When both 6-Pole Convergence Magnet Tabs are rotated as a pair, the convergence of magenta to green horizontal lines is adjusted.

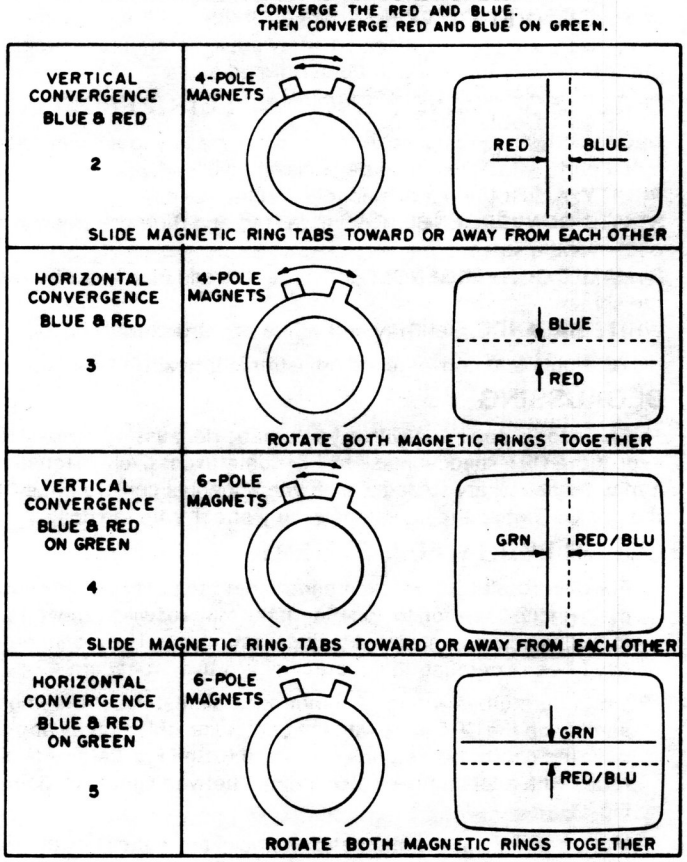

FIG. 5

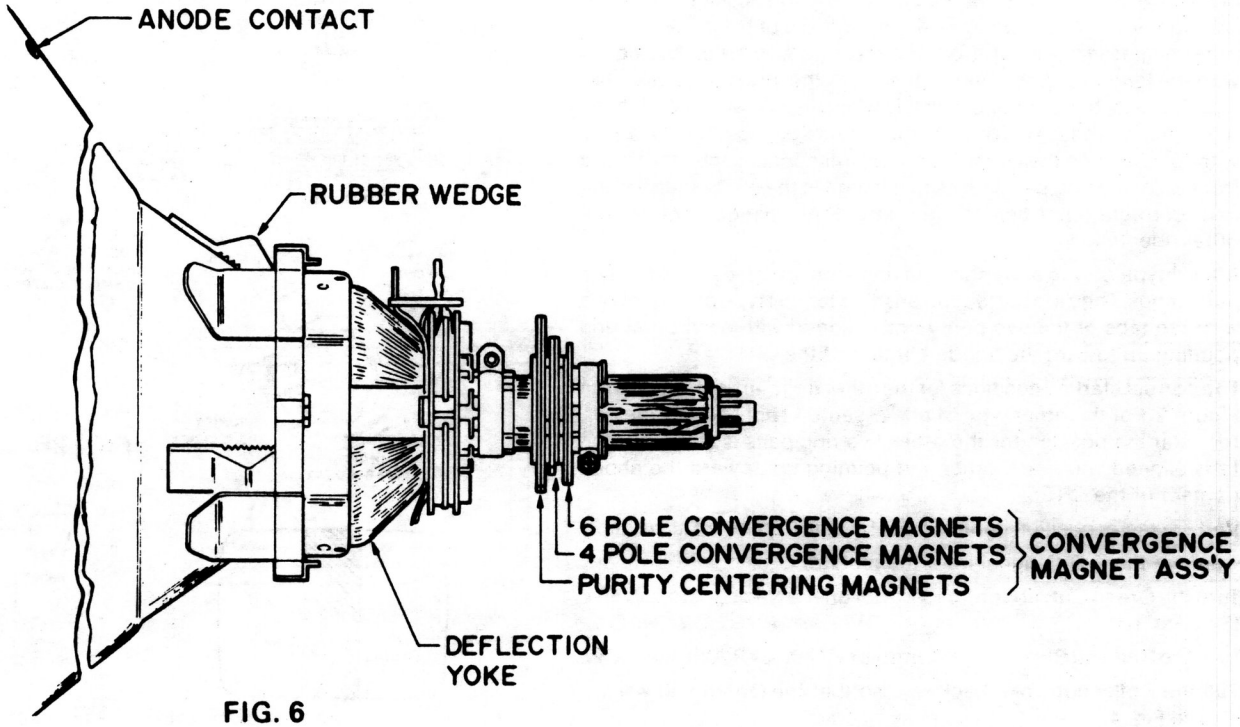

FIG. 6

PRECISE ADJUSTMENT OF DYNAMIC CONVERGENCE

1 . Feed a cross hatch signal to the monitor.
2 . Insert wedge temporarily and fix the Deflection Yoke so as to obtain the best circumference convergence (See Fig. 8 and 9)
NOTE:
The wedges may need to be moved during adjustments.
3 . Insert three rubber wedges to the position as shown in

NOTE:

1) Tilting the angle of the yoke up and down adjusts the crossover of both vertical and horizontal red and blue lines. See Fig. 8 (a) and (b).
2) Tilting the angle of the yoke sideways adjusts the parallel convergence of both horizontal and vertical lines at the edges of the screen. See Fig. 9 (a) and (b).
3) Use three rubber wedges (tapered rubber wedges are used for a purpose).
4) The position of each rubber wedge is shown in Fig. 7.
5) Do NOT force the permanent wedges in. They are to be inserted until they just make contact with the yoke–after the yoke has been positioned.
6) Fix the three permanent rubber wedges with chloroprene rubber adhesive.
7) After the adhesive has dried enough to hold the wedges in place, carefully remove the temporarily installed wedge.

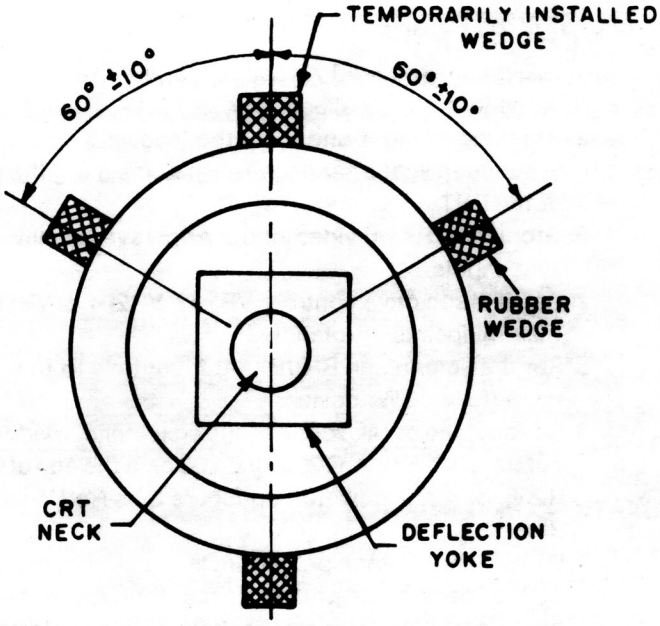

FIG. 7

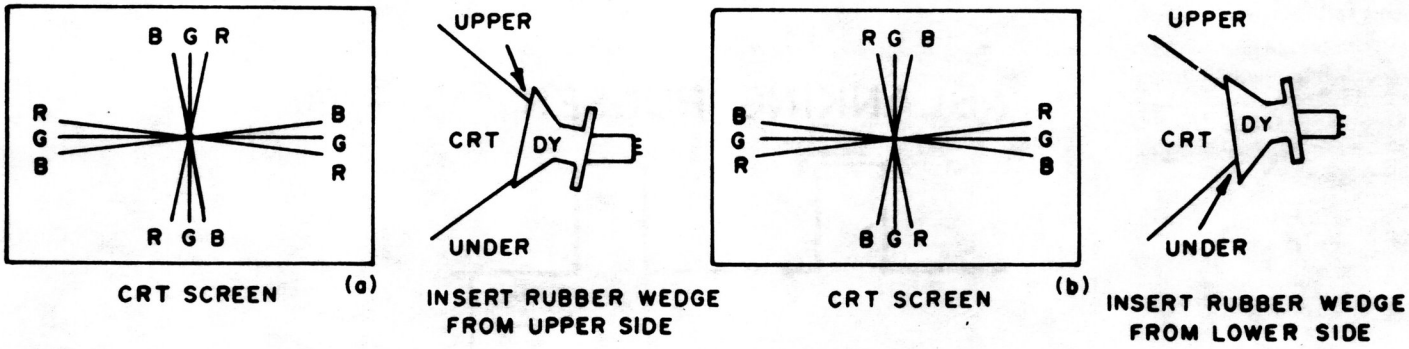

FIG. 8

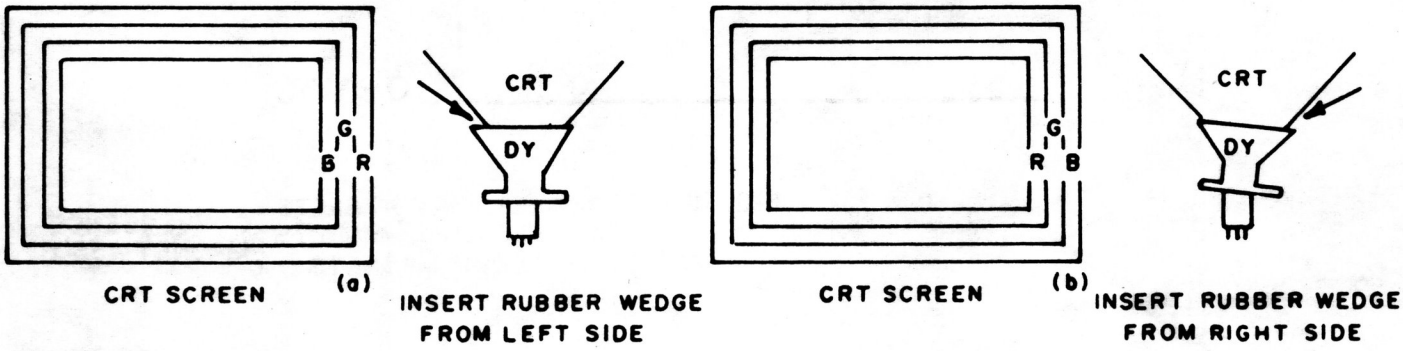

FIG. 9

WHITE BALANCE

1. Equipment Required: An oscilloscope with a DC coupled mode in the vertical amplifier.
2. Referring to Fig. 1 and 3, do the following adjustments in subdued light after degaussing and setting the purity of the CRT.
3. Ground the R/G/B video inputs. Apply sync signals to the sync inputs.
4. Set all three drive controls, VR202, VR204, & VR206, to their midpoints of rotation.
5. Set the screen and R/G/B cutoff controls to their minimum (fully CCW) positions.
6. Connect the oscilloscope to the collector of a video output transistor Q201, Q202, or Q203 or to the end of R207, R208, or R209 indicated on Figure 3 as Red, Green, or Blue.
7. If this white balance procedure is required because the CRT or neck board was replaced, then leave the contrast control at its original setting. If the contrast control is known to be grossly out of adjustment, then set it to its center of rotation. Adjust the brightness control VR6 to obtain the waveform shown in Figure 10. Now remove the scope probe.
8. Slowly turn the screen control CW until the raster is just visible. The color of this raster is called the lead color gun. DO NOT adjust its associated cutoff control. It must remain fully CCW.
9. Adjust the screen control CCW until the raster is just extinguished.
10. Adjust the brightness control for a dim raster. Adjust the two remaining cutoff controls (NOT the lead color gun cutoff control) for best gray uniformity.
11. Adjust the brightness control for a bright raster but not maximum brightness. Adjust the R/G drive controls, if necessary, for best neutral white. Try not to adjust the blue drive control.
12. Repeat steps 10 and 11 until good tracking of white balance is achieved. End with step 10.
13. With the oscilloscope connected to the collector of the lead color video output transistor (See Fig. 3), adjust the brightness control to obtain the waveform in Fig. 10.

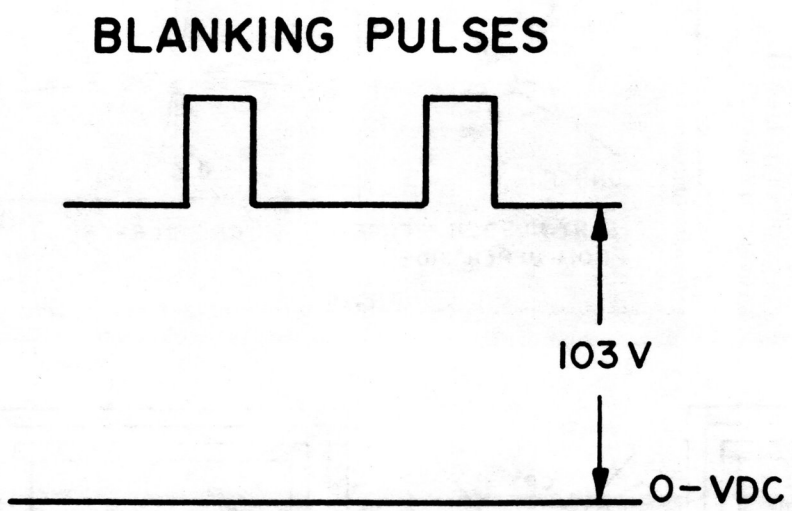

FIG. 10

TYPICAL OSCILLOSCOPE WAVEFORM PATTERNS

The waveforms shown below were observed on a wide band oscilloscope. The input signal was from a crosshatch generator with a horizontal sync frequency of 15.73kHz and a vertical frequency of 60 Hz. If the waveforms are observed on an oscilloscope with a limited high frequency response, the corners of the pulses will tend to be more rounded than those shown, and the amplitude of any high frequency pulse will tend to be less.

Each photograph is numbered. These numbers correspond to the circled numbers on the schematic diagrams.

Photographs 12, 13, 14, 15 and 16 are of the red signal at various points along the red video channel. The waveforms at corresponding points along the green and blue video channels will look similar.

1.

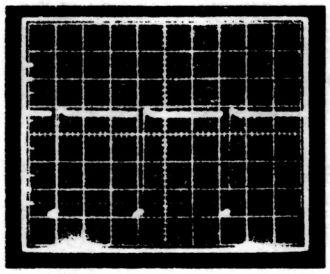

2V/DIV 20 uSEC/DIV

2.

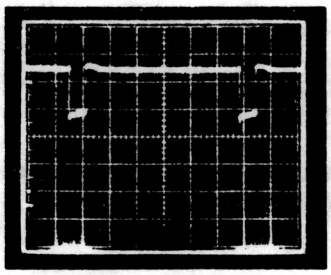

2V/DIV 10 uSEC/DIV

3.

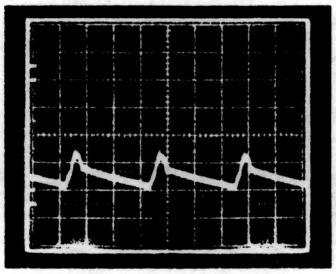

0.5V/DIV 20 uSEC/DIV

4.

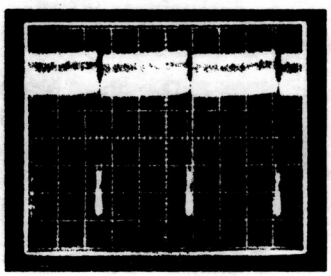

0.2V/DIV 5MSEC/DIV

5.

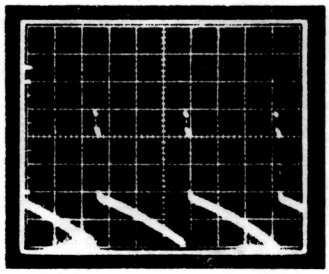

10V/DIV 5MSEC/DIV

6.

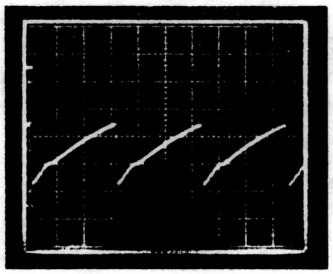

2V/DIV 20 uSEC/DIV

7.

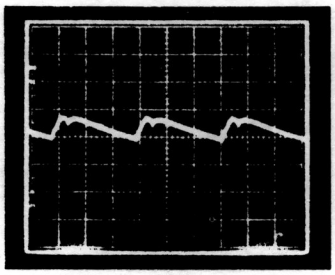

1V/DIV 20 uSEC/DIV

8.

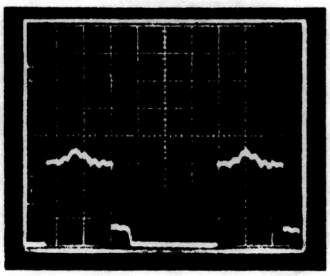

0.5V/DIV 10 uSEC/DIV

9.

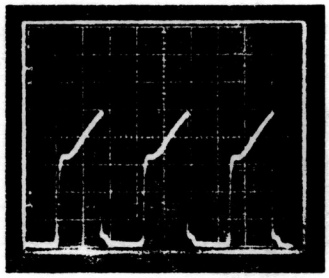

20V/DIV 20 uSEC/DIV

10.

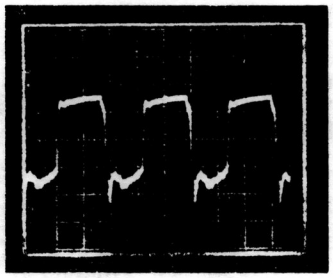

0.5V/DIV 20 uSEC/DIV

11.

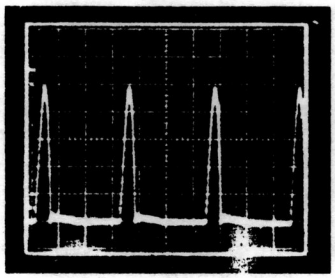

5V/DIV 20 uSEC/DIV

12.

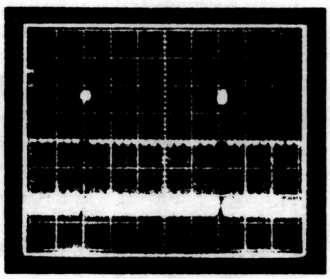

1V/DIV 0.2MSEC/DIV

13.

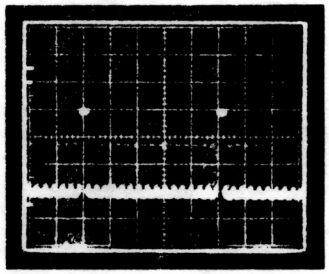

1V/DIV 0.2MSEC/DIV

14.

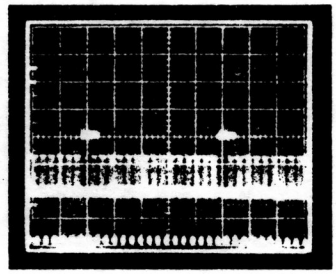

1V/DIV 0.2MSEC/DIV

15.

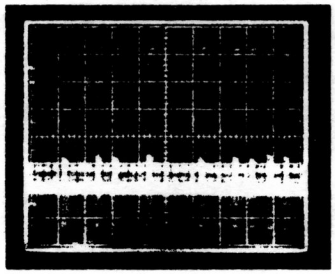

2V/DIV 0.2MSEC/DIV

16.

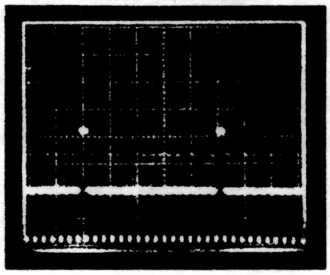

1V/DIV 0.2MSEC/DIV

TROUBLESHOOTING NOTES

1. The troubleshooting chart mentions specific components to be checked. It is intended that the entire circuit associated with these components be checked.

2. This chart is a guide to servicing rather than a complete list of each component that could fail. Therefore, troubleshooting should not be limited only to those components mentioned in the chart.

3. It is always useful to begin checking a circuit by measuring the DC voltages and then comparing the measurements to those listed in the Typical DC Voltages chart.

4. The cutoff controls and drive controls on the neck board and the screen control at the bottom of the flyback transformer have been preset at the factory. When servicing the monitor for a lack of video, do not adjust any of these controls unless it is suspected that the problem is a result of these controls having been tampered with. Otherwise do not adjust these controls; if they are so severely out of adjustment that there is a lack of video, then there is something malfunctioning.

5. The Wells-Gardner Service Department does accept telephone calls for servicing assistance. Call 1-312-252-8220, between 7:00am and 3:30pm Central Time. Ask for the Service Department. The Service Department is closed during the first two weeks of July. Telephone assistance is not available during this period. Before calling, be sure to have available the model number of the monitor being serviced and the schematic diagram of the monitor being serviced.

6. Replacement parts may be ordered from the Service Department between 7:00am and 4:30pm Central Time.

7. All monitors are equipped with automatic degaussing coils which demagnetize the picture tube every time the monitor is turned on after being off for a minimum of 20 minutes. Should any part of the chassis become magnetized it will be necessary to degauss the affected area with a manual degaussing coil. Move the coil slowly around the CRT face area and all surrounding metal parts. Then slowly withdraw for a distance of 6 feet before turning off.

8. **Horizontal vs. Vertical:**

   Some models have the picture tube mounted vertically rather than horizontally. That is, the picture tube is mounted in the frame such that the long dimension of the tube is up and down. Examples of this include (but are not limited to) Models 13K7851 and 19K7951. Other than the physical orientation of the picture tube, there is no electrical difference between these models and their horizontal counterparts. The same circuits, the vertical circuits, produce and control deflection along the short dimension of the tube in all models.

   The same circuits, the horizontal circuits, produce and control deflection along the long dimension of the tube in all models. Therefore, wherever "vertical" appears in this manual or on the monitor, it refers to the short dimension of the picture tube; wherever "horizontal" appears, it refers to the long dimension of the picture tube.

TROUBLESHOOTING CHART

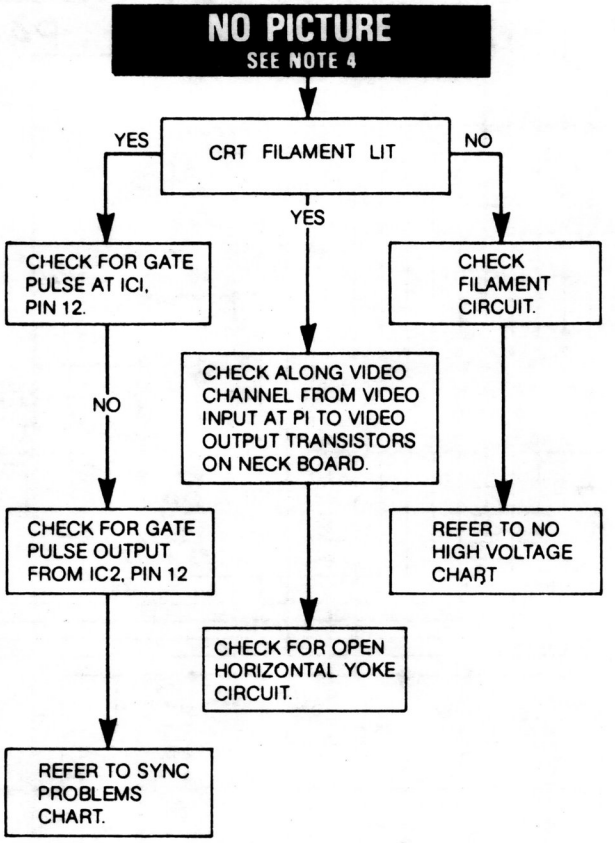

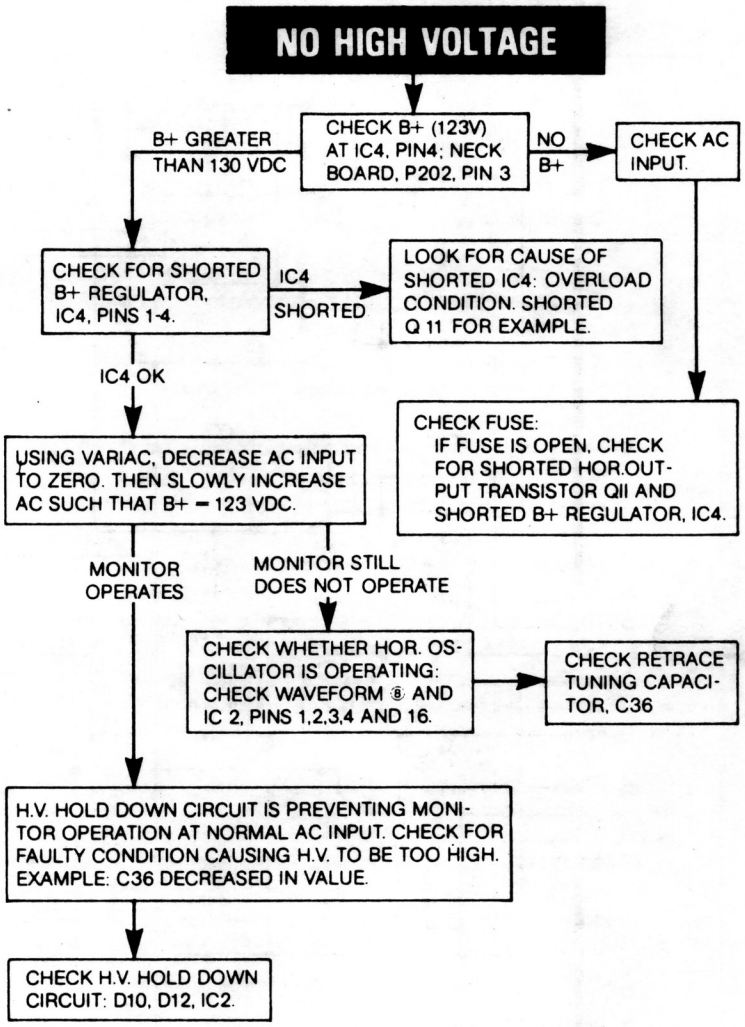

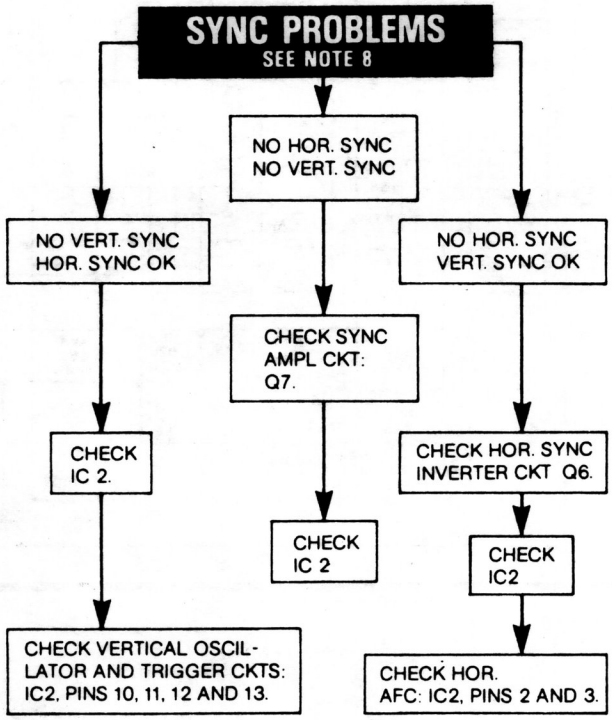

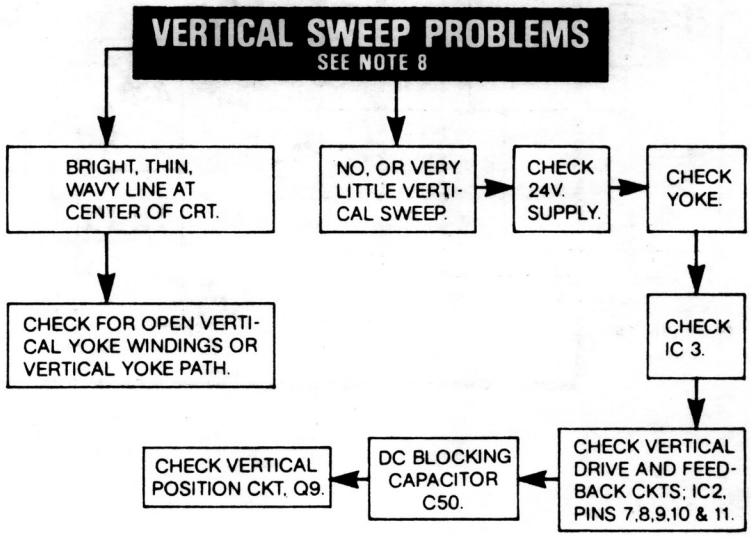

K7000 COLOR MONITOR SCHEMATIC DIAGRAM

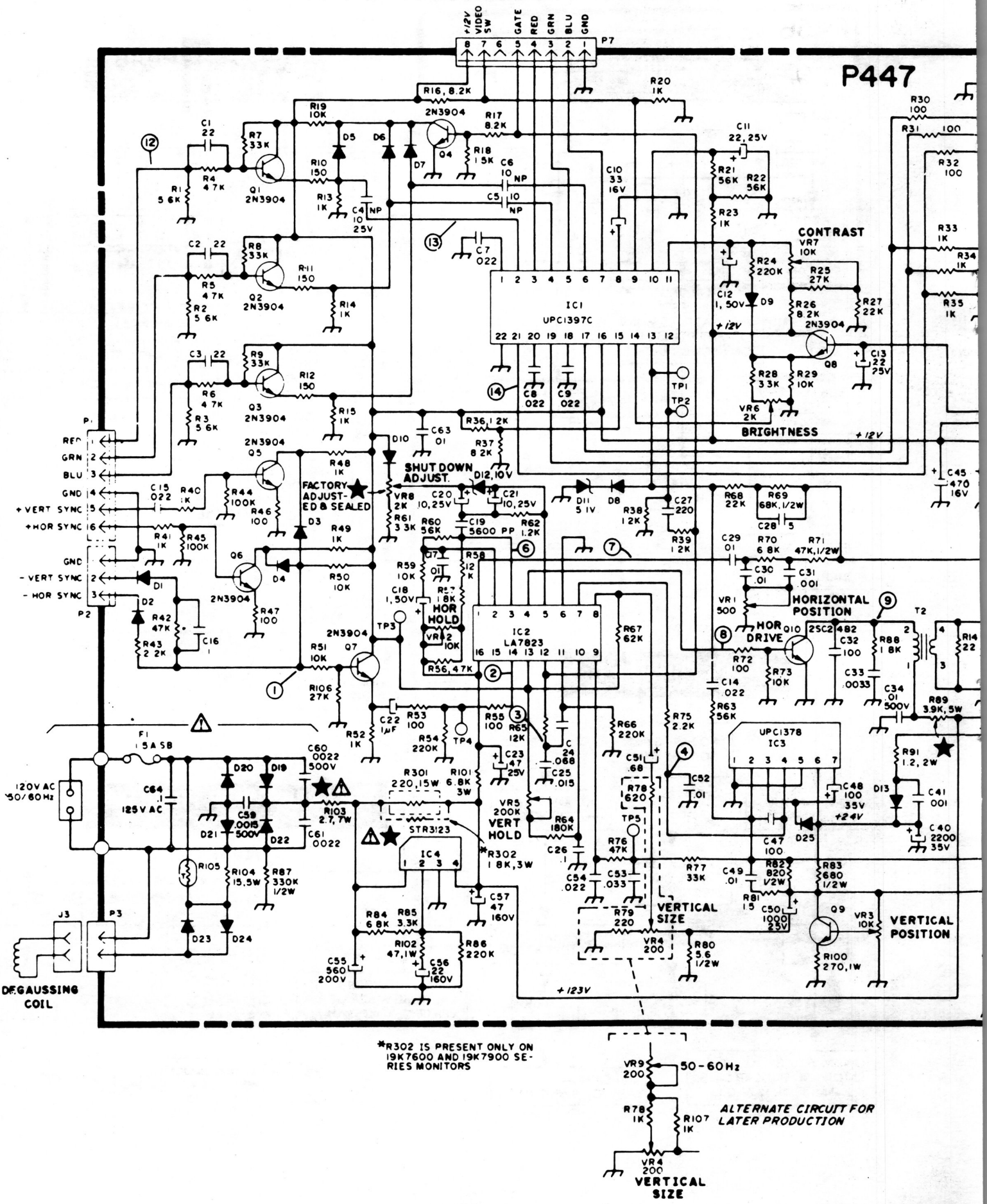

*R302 IS PRESENT ONLY ON 19K7600 AND 19K7900 SERIES MONITORS

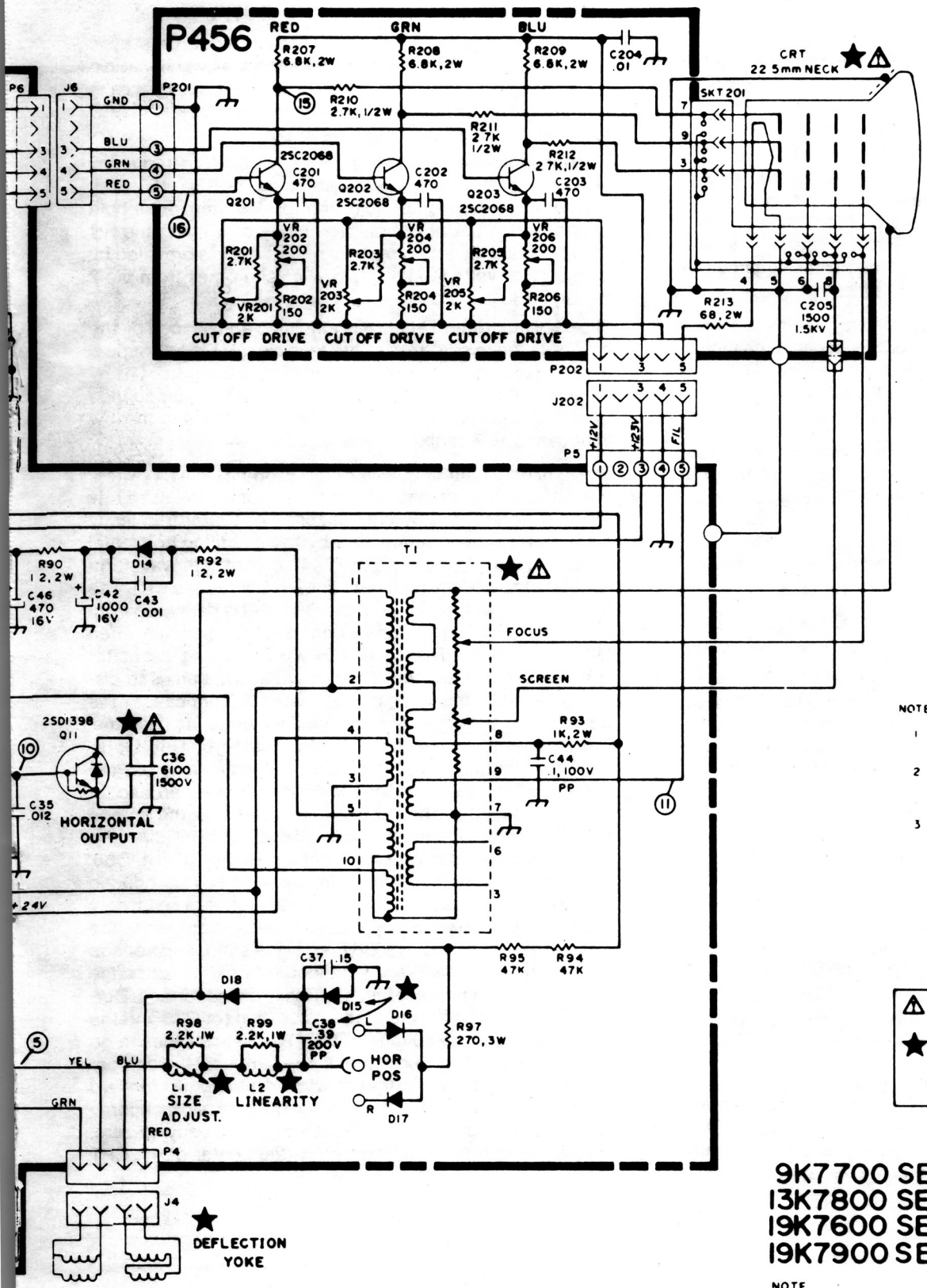

NOTES

1. ALL RESISTORS ARE IN OHMS, 1/4W, 5% UNLESS OTHERWISE INDICATED
2. CAPACITANCE VALUES LESS THAN 1 ARE IN MICROFARADS ABOVE 1 IN PICOFARADS UNLESS OTHERWISE INDICATED
3. CIRCLED NUMBERS INDICATE LOCATIONS OF CERTAIN WAVEFORM READINGS

⚠ **CAUTION** SAFETY CRITICAL COMPONENT

★ X-RAY RADIATION RELATED COMPONENT

REPLACE ONLY WITH SAME TYPE PARTS AS SHOWN IN PARTS LIST.

9K7700 SERIES
13K7800 SERIES
19K7600 SERIES
19K7900 SERIES

NOTE
REFER TO OTHER SCHEMATIC DIAGRAMS FOR CERTAIN UNIQUE MODELS

VIDEO INTERFACE AND OUTPUT

The red, green, and blue video inputs come into the monitor at P1. Isolation and attenuation is provided by emitter followers Q1, Q2 and Q3. Forced blanking of the video signals is provided by the circuit of Q4, D5, D6, and D7. The forced blanking causes there to be an interruption in the video signal before it goes to the inputs of IC1. This interruption occurs between scan periods, while retrace is taking place; it is required by IC1. The forced blanking is not necessary for most video signals since they already have an interruption of video (blanking) between scan periods. Some do not; it is to accommodate such signals that the forced blanking circuit is included.

The red, green, and blue signals go into IC1 at pins 2, 4, and 6. Their levels are controlled by the gain of separate channels of the contrast amplifier. The gain is controlled by a DC voltage input to pin 11, which varies with the setting of the contrast control.

IC1 provides blanking of the video during retrace in response to blanking pulses at pin 13, derived from the horizontal and vertical sweep circuits. IC1 also requires a gating signal at pin 12 in order to provide red, green, and blue outputs at pins 21, 19, and 17. If the gating signal is not present, IC1 will not provide video output signals. The gating signal comes from IC2, pin 12 and is derived from horizontal sync.

The brightness is varied by varying the DC level of the outputs at pins 17, 19, and 21. This is accomplished by varying the DC voltage input to pin 14.

The video outputs from IC1 are provided via R30, R31, and R32 to the neck board where they are amplified by the video output stages Q201, Q202, and Q203 before being applied to the cathodes of the CRT through R10, R11, and R12.

SYNC

Sync is applied at P1 (positive sync) or at P2 (negative sync). Composite sync should be applied only to the horizontal sync input of the appropriate polarity. Positive sync is inverted by Q5 and Q6 then applied through D3, D4 and R51 to the sync amplifier Q7.

The sync amplifier output is applied through C22, R53, and R55 to pin 14 of IC2. Pin 14 is the sync separation input.

The sync separator extracts the horizontal and vertical sync from each other–providing horizontal sync to the horizontal AFC circuit in the IC. A composite sync output is provided at pin 12. This output signal is used for gating IC1 the video interface IC and for triggering the vertical oscillator.

HORIZONTAL OSCILLATOR AND OUTPUT

The horizontal AFC circuit of IC2 receives a horizontal sync input from the sync separator and a feedback signal at pin 1, derived from the horizontal output. Slight differences in frequency and phase of the two signals will cause the AFC to generate a correction voltage at pin 2.

The horizontal oscillator in IC2 has its free running frequency determined by the RC time constant of C19, R56, R57, R58, and VR2, the horizontal hold control. The horizontal hold control varies the horizontal frequency by varying the RC time constant. Slight correction in frequency is provided by a correction voltage at IC2, pin 3 which comes from pin 2 through R60.

The oscillator output at pin 4 is amplified and shaped by the horizontal drive stage Q10. The drive signal is then coupled to the base circuit of the horizontal output transistor Q11 by the horizontal drive transformer T2. T2 is used for impedance transformation to provide the Q11 base circuit with the low impedance source that it requires.

The horizontal output transistor Q11 is operated as a switch. It is either on or off. It is turned on and off at the scan rate which is determined by the horizontal oscillator frequency which is ultimately determined by the incoming horizontal sync frequency. A yoke current with a sawtooth waveform is needed to deflect the beam linearly across the CRT. The beam begins at the center of the CRT and is deflected from center to right. This center-to-right deflection occurs when Q11 is turned on. The deflection yoke coupling capacitor C38, also known as the S-shaping capacitor, begins to discharge through the yoke; the discharge current causes the beam to be deflected to the right CRT edge. At this time, Q11 is turned off, and the current provided by C38 stops. As the current falls to zero, a voltage is induced across the yoke windings as the magnetic field collapses; an oscillation is produced by the yoke windings and C36, the retrace tuning capacitor. During the first half cycle of oscillation, the induced voltage is impressed on the collector of Q11, C36, and the primary of they flyback transformer T1. This induced voltage is stepped up by the flyback transformer's secondary winding. This high voltage is then rectified and applied to the high voltage anode of the CRT. When this induced voltage occurs, the electron beam is deflected from the right edge of the CRT face to the left edge. This is called retrace. During the second half cycle of the oscillation (of C36 and the yoke windings), the voltage at the Q11 collector tries to go negative or below ground. When this happens, the damper diode (include in same package with Q11) becomes forward biased. The conduction of the damper diode allows energy stored in the horizontal system to decay linearly to zero, thus allowing the beam to return to the center of the CRT face.

The focus voltage and the screen, G2, voltage are obtained from the anode voltage with a resistor divider network within the T1 assembly. An auxiliary winding (pin 10) provides feedback to the horizontal AFC through R71, R70, and C29. This signal is also used to furnish the horizontal blanking input to IC1 via C28, R69, and R68. The signal from the auxiliary winding at pin 5 of T1 is rectified by D14 and filtered to provide the +12VDC supply for the video interface and sync circuits. The auxiliary winding of pins 3 and 4 produces a signal which is rectified by D13 and filtered to produce the +24VDC supply for the vertical output circuit.

The horizontal linearity coil L2 is a magnetically biased coil which shapes the yoke current for optimum linearity. The horizontal size coil L1 is a variable series inductor which is used to vary the horizontal size of the display.

HIGH VOLTAGE HOLD-DOWN CIRCUIT

The high voltage hold down circuit is part of the main PC board P447 of this monitor. The +12V DC supply is sensed via D10. Since the +12V DC supply is flyback pulse derived, the +12V DC supply will rise as the high voltage rises. If the +12V DC exceeds a threshold which is set with VR8, then D12 will conduct, thereby providing drive to IC2, pin 5–holddown input of deflection oscillator IC. The drive being applied to pin 5 causes the horizontal oscillator within the IC to shut down–thus preventing the generation of high voltage.

The horizontal oscillator will remain in its OFF state, even if the input to IC2, pin 5 is removed, unless and until AC power is removed from the monitor input. The power may then be reapplied.

VERTICAL OSCILLATOR AND OUTPUT

The composite sync ouput of IC2, pin 12 is filtered through the network of R65, C25, C24 and R66 so that only vertical sync is applied to the vertical trigger input at pin 11. The vertical oscillator frequency is controlled by the vertical hold control and its input to pin 10.

The vertical drive output at IC2, pin 7 is applied to pin 4 of IC3, the vertical output IC. Output current from IC3, pin 2 flows through the yoke to cause vertical deflection. During upward deflection, current flows out of pin 2, through the yoke, and into C50 to charge it. Downward deflection is caused by C50 discharging through the yoke in the opposite direction and back into IC3, pin 2. AC feedback is provided through the wiper of the vertical size control VR4 to IC2, pin 8 in order to control the drive amplitude. DC feedback at IC2, pin 9 maintains good vertical linearity at all sizes.

DC current from the +24V supply flows through R83 and through the yoke to provide downward raster shift. Some of this DC current is diverted from the yoke through the collector of Q9. The amount of this current which is diverted from the yoke can be varied by varying the base drive to Q9 by adjusting VR3, the vertical position control, thus providing manual adjustment of the vertical position of the display.

The drive signal at IC3, pin 2 is also used to furnish the vertical blanking input to IC1, pin 13 via R63 and C14.

AUTOMATIC DEGAUSSING ADG

The ADG circuit automatically demagnetizes the CRT. This circuit is activated only when the monitor is initially powered up after having been off for at least 20 minutes.

R105 is a positive temperature coefficient device. When it is cold, it has a very low resistance. As it gets warm, its resistance increases. If the monitor is cold when AC power is applied, then R105 with a low resistance allows current to pass through it, D23, D24, and the degaussing coil. As current flows through R105, it heats up and eventually has a very high resistance, allowing very little current to flow through it. The residual current now flowing through R105 produces a voltage drop across R104 of less than 0.6 volts. This is not enough to forward bias D23 and D24, so there is no current through the degaussing coil.

The process of initially having a large current through the degaussing coil and then having the current decay to zero is what produces the degaussing action. The degaussing current decays to zero before the CRT warms up, so the degaussing is completed before the picture comes on.

TYPICAL DC VOLTAGES WITH INPUT SIGNAL

Voltages shown below are for reference only.
Voltages may vary with input signal and with control adjustment.

TRANSISTOR NUMBER	Q1	Q2	Q3	Q4	Q5	Q6	Q7	Q8	Q9	Q10	Q11	Q201	Q202	Q203
COLLECTOR	12.0	12.0	12.0	10.7	11.0	11.0	12.0	12.0	12.3	40.6	*	107.8	107.8	107.8
BASE	1.7	1.7	1.7	0.1	0.2	0.2	6.0	12.8	3.3	0.4	0.03	1.7	1.7	1.7
EMITTER	1.0	1.0	1.0	0	0.01	0.01	5.4	12.0	2.6	0	0	1.4	1.4	1.4

* DO NOT MEASURE

DIODE NO.	ANODE	CATHODE
D1	8.5	9.1
D2	8.5	9.1
D3	8.5	11.0
D4	8.5	11.0
D5	0.9	10.7
D6	0.9	10.7
D7	0.9	10.7
D8	0.55	2.6
D9	7.7	12.0
D10	12.0	11.4
D11	0	2.6
D12	0.05	9.8
D13	----	24.0
D14	0.17	12.2
D15	0	8.0
D16	----	123
D17	123	----
D18	8	*
D19	----	164.3
D20	0	----
D21	0	----
D22	----	164.3
D23	----	----
D24	----	----
D25	24.0	23.6

IC NO.	1	2	3	4
TERMINAL NUMBER				
1	3.0	4.3	0	163.5
2	2.0	6.8	12.2	125.2
3	2.7	6.7	23.6	0
4	2.0	0.6	0.8	123.0
5	2.7	0.5	0	
6	2.0	0.3	24.0	
7	2.7	0.9	2.2	
8	2.7	3.5		
9	1.3	0.3		
10	10.4	6.2		
11	7.9	0.6		
12	0	1.3		
13	0.55	12.0		
14	2.1	13.7		
15	10.5	0.8		
16	12.0	12.8		
17	1.7			
18	3.0			
19	1.7			
20	3.0			
21	1.7			
22	0			

* DO NOT MEASURE

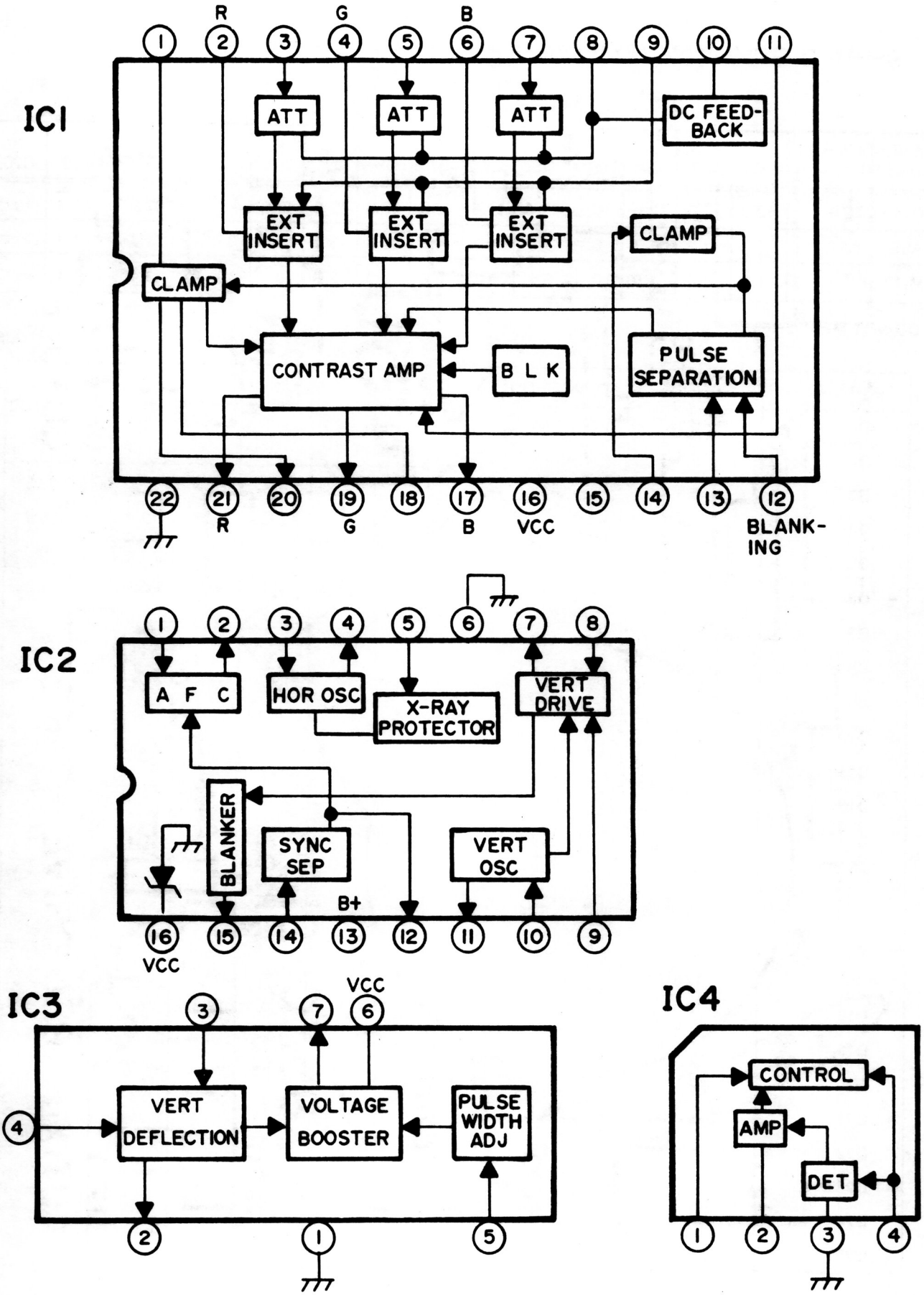
IC1
R
G
B
ATT
ATT
ATT
DC FEED-BACK
EXT INSERT
EXT INSERT
EXT INSERT
CLAMP
CLAMP
CONTRAST AMP
B L K
PULSE SEPARATION
R
G
B
VCC
BLANK-ING
IC2
A F C
HOR OSC
X-RAY PROTECTOR
VERT DRIVE
BLANKER
SYNC SEP
VERT OSC
B+
VCC
IC3
VCC
VERT DEFLECTION
VOLTAGE BOOSTER
PULSE WIDTH ADJ
IC4
CONTROL
AMP
DET

FIG. 11

PC BOARD LAYOUT P456

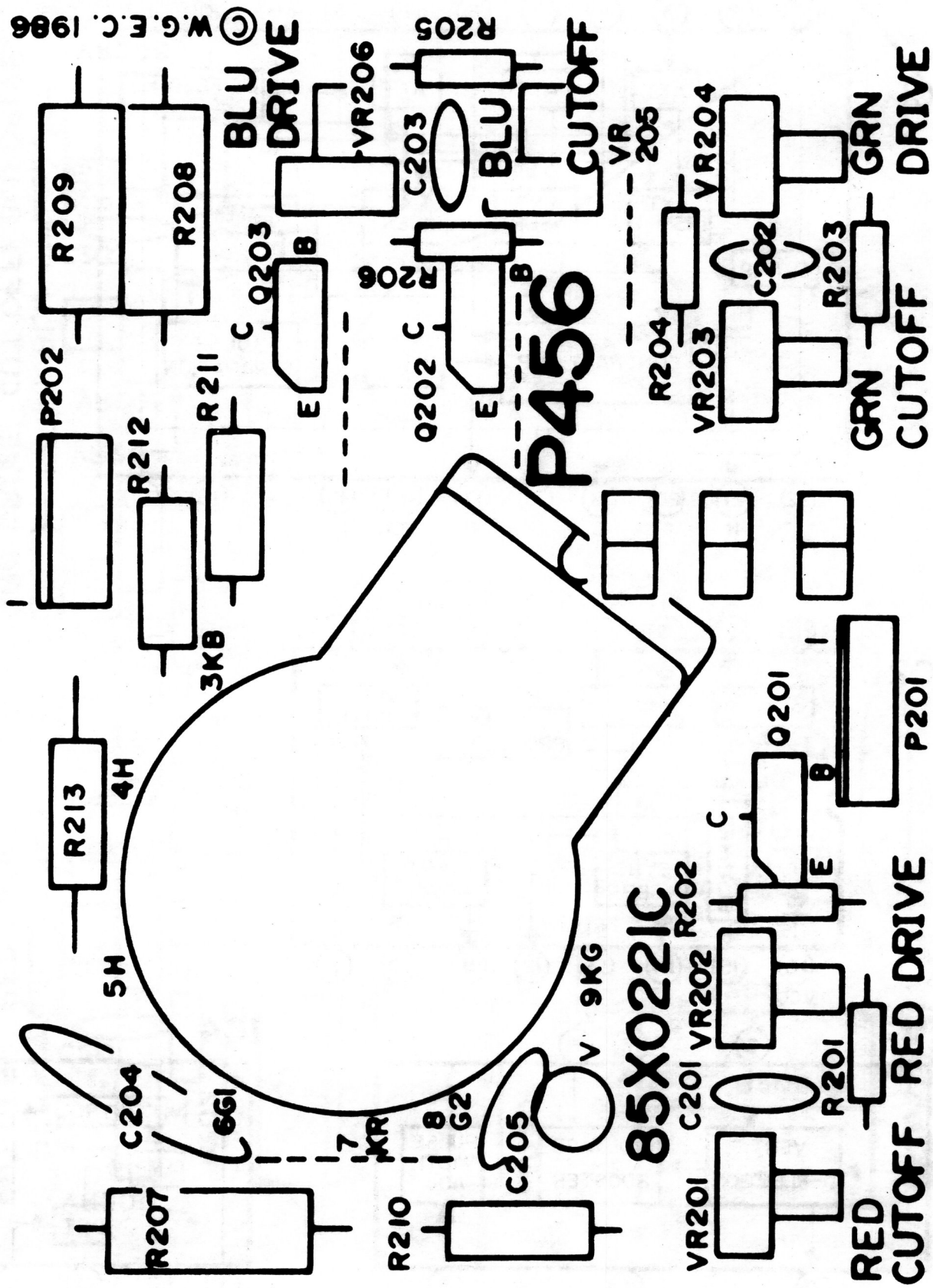

VIEW OF COMPONENT SIDE

FIG. 12

PC BOARD LAYOUT P448

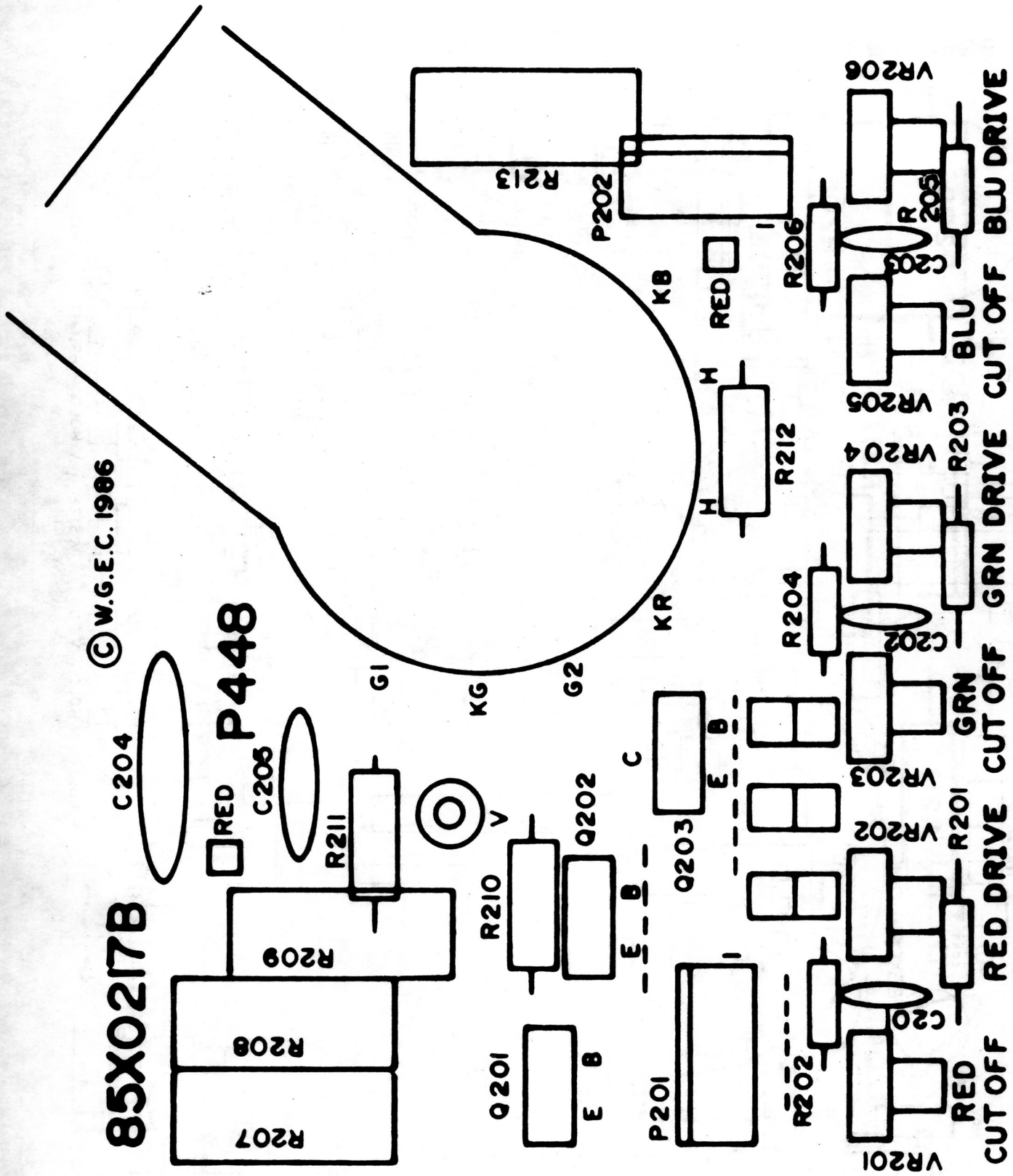

VIEW OF COMPONENT SIDE

FIG. 13

MAIN PC BOARD LAYOUT

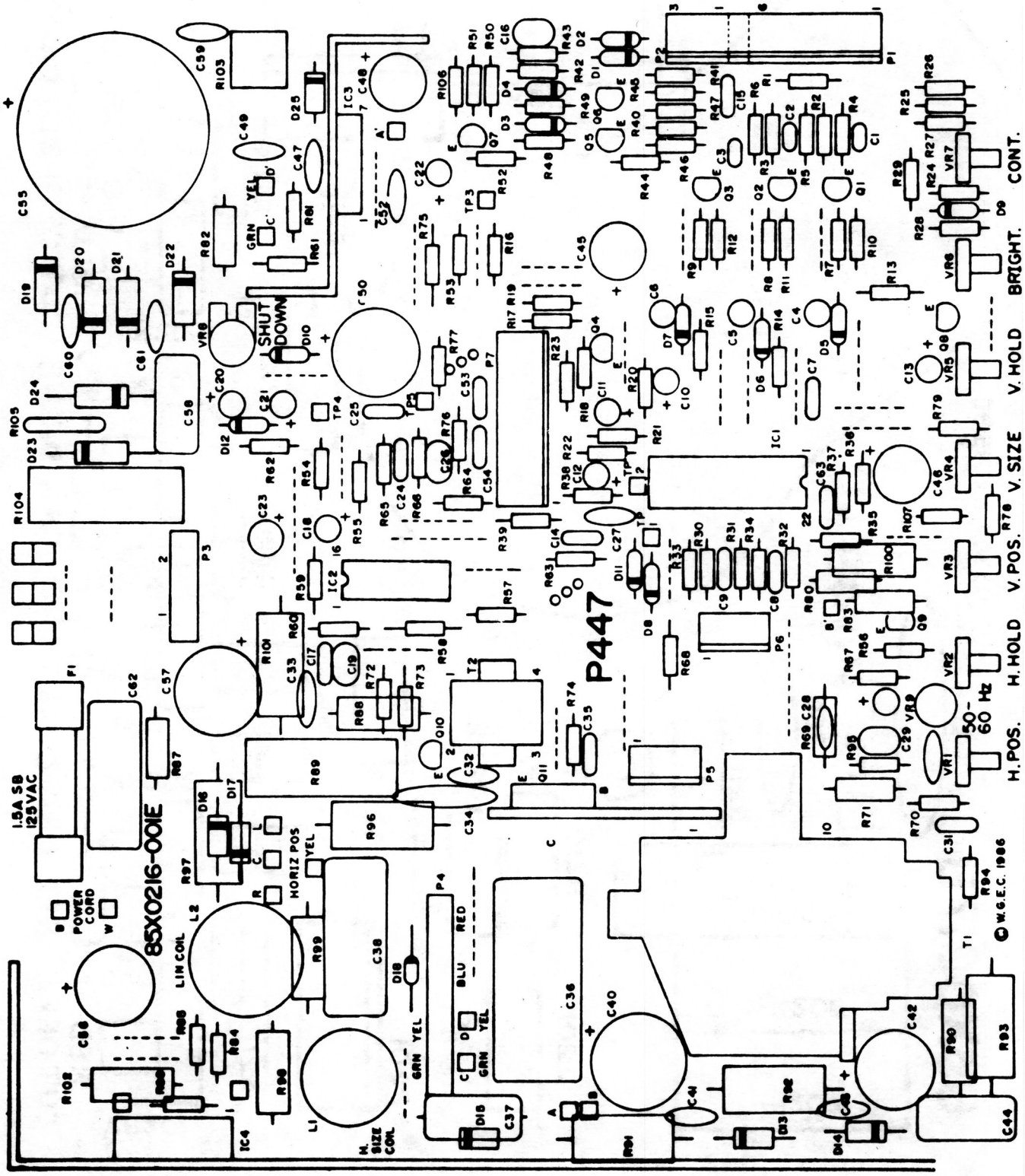

FIG. 14

FRONT CONTROL BOARD P485

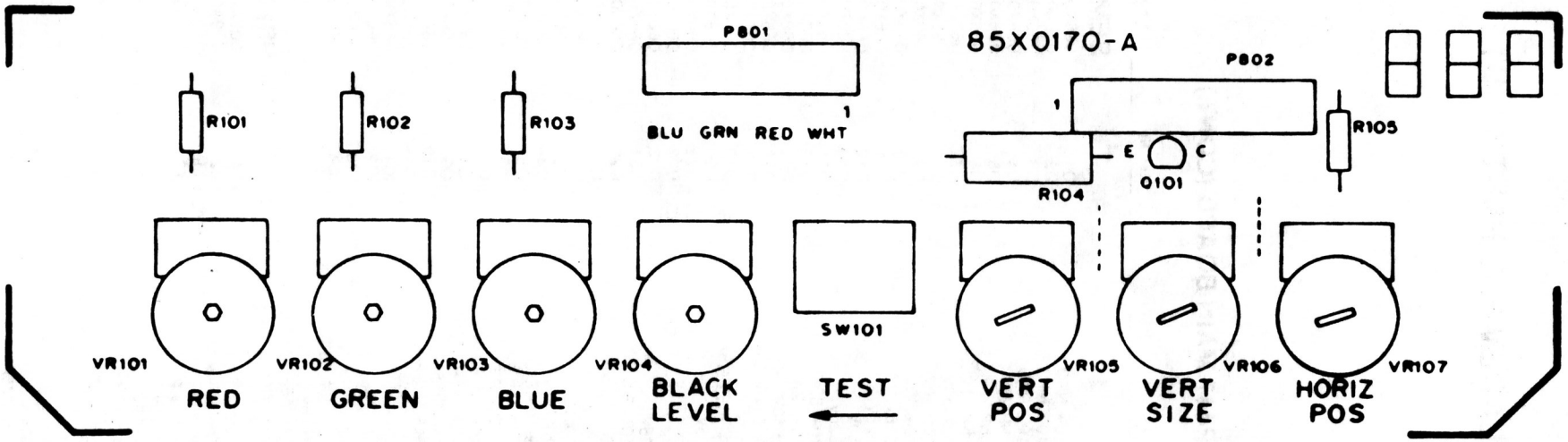

FIG. 15

REPLACEMENT PARTS LIST

P447 MAIN BOARD (CONT.)

CAPACITORS

Ref. No.	Part No.	Description
C1	080X0099-671	Disc 22PF 10% NPO
C2	080X0099-671	Disc 22PF 10% NPO
C3	080X0099-671	Disc 22PF 10% NPO
C4	045X0577-501	Elect 10MF NP 25V
C5	045X0577-501	Elect 10MF NP 25V
C6	045X0577-501	Elect 10MF NP 25V
C7	047X0786-502	MYR .022 10% 50V
C8	047X0786-502	MYR .022 10% 50V
C9	047X0786-502	MYR .022 10% 50V
C10	045X0560-531	Elect 33MF 16V
C11	045X0560-534	Elect 22MF 25V
C12	045X0560-514	LYT 1.0UF 50V
C13	045X0560-534	Elect 22MF 25V
C14	047X0786-502	MYR .022 10% 50V
C15	047X0786-502	MYR .022 10% 50V
C16	047X0786-511	MYR .1 10% 50V
C17	047X0786-501	.010UF 10% 50V P-Estr
C18	045X0560-514	LYT 1.0UF 50V
C19	046X0550-502	PP .0056 2% AWS 50V
C20	045X0560-518	LYT 10UF 25V
C21	045X0560-518	LYT 10UF 25V
C22	045X0560-514	LYT 1.0UF 50V
C23	045X0560-517	LYT 47UF 25V
C24	047X0786-503	MYR .068 10% 50V
C25	047X0786-512	P-Ester .015 10% 50V
C26	047X0786-511	Myr .1 10% 50V
C27	080X0099-557	Disc 220 10% Z5F
C28	080X0098-048	5PF 20% 2KV NPO
C29	047X0786-501	.010UF 10% 50V P-Estr
C30	080X0099-505	Disc .001 20% Z5F 500V
C31	047X0786-501	.010UF 10% 50V P-Estr
C32	080X0099-580	Disc 100 10% Z5F 500V
C33	080X0099-722	Disc .0033 10% Y5P 500V
C34	080X0099-221	Disc .01 10% Y5P 500V
C35	047X0786-501	.010UF 10% 50V P-Estr
⚠★C36	046X0551-003	PP 6100 2% 1500V
C37	046X0544-005	.15 100V PF
★C38	046X0536-046	.39UF 5% 200V PP
C40	045X0560-033	Elect 2200 35V
C41	080X0099-505	Disc .001 20% Z5F 500V
C42	045X0560-006	LYT 1000UF 16V
C43	080X0099-505	Disc .001 20% Z5F 500V
C44	046X0544-009	.1 10% 100V P-Prop
C45	045X0560-020	LYT 470UF 16V
C46	045X0560-020	LYT 470UF 16V
C47	080X0099-580	Disc 100 10% Z5F 500V
C48	045X0560-532	Elect 100MF 35V
V49	047X0786-501	.010UF 10% 50V P-Estr
C50	045X0560-023	LYT 1000UF 25V
C51	045X0525-512	Tan .68 10% 35V
C52	047X0786-501	.010UF 10& 50V P-Estr
C53	047X0786-514	.033UF 5% 50V P-Estr
C54	047X0786-515	MYR .022 5% 50V
C55	045X0578-001	Elect 560 200V
C56	045X0569-008	LYT 22UF 160V
C57	045X0569-011	Elect 47 160V
⚠ C59	080X0099-724	Disc .0015 10% Y5P 500V
⚠ C60	080X0099-723	Disc .0022 10% Y5P 500V
⚠ C61	080X0099-723	Disc .0022 10% Y5P 500V
⚠ C62	046X0552-001	.1 20% 125VAC
C63	047X0786-501	.010UF 10% 50V P-Estr

SEMICONDUCTORS

Ref. No.	Part No.	Description
D1	066X0070-001	Diode 1N914B
D2	066X0070-001	Diode 1N914B
D3	066X0070-001	Diode 1N914B
D4	066X0070-001	Diode 1N914B
D5	066X0070-001	Diode 1N914B
D6	066X0070-001	Diode 1N914B
D7	066X0070-001	Diode 1N914B
D8	066X0070-001	Diode 1N914B
D9	066X0070-001	Diode 1N914B
D10	066X0070-001	Diode 1N914B
D11	066X0040-028	Zener Diode 5.1V 5% 0.5W
D12	066X0040-005	Zener Diode 10V 5% 0.5W
D13	066X0090-001	D1 Fast SW RU-2
D14	066X0090-001	D1 Fast SW RU-2
★D15	066X0090-001	D1 Fast SW RU-2
D16	066X0090-001	D1 Fast SW RU-2
D17	066X0090-001	D1 Fast SW RU-2
D18	066X0084-001	Diode Sanyo GFE10R
⚠ D19	066X0091-001	Diode SI 1A 600V
⚠ D20	066X0091-001	Diode SI 1A 600V
⚠ D21	066X0091-001	Diode SI 1A 600V
⚠ D22	066X0091-001	Diode SI 1A 600V
D23	066X0091-001	Diode SI 1A 600V
D24	066X0091-001	Diode SI 1A 600V
D25	066X0089-001	D1 Boost
Q1	086X0113-501	TRSTR NPN 2N3904
Q2	086X0113-501	TRSTR NPN 2N3904
Q3	086X0113-501	TRSTR NPN 2N3904
Q4	086X0113-501	TRSTR NPN 2N3904
Q5	086X0113-501	TRSTR NPN 2N3904
Q6	086X0113-501	TRSTR NPN 2N3904
Q7	086X0113-501	TRSTR NPN 2N3904
Q8	086X0113-501	TRSTR NPN 2N3904
Q9	086X0113-501	TRSTR NPN 2N3904
Q10	086X0185-501	TRSTR NPN CC
Q11	086X0190-001	TRSTR 2SD1398
IC1	086X0186-001	IC Video UPC1397 NEC
IC2	086X0187-001	IC Horiz Vert LA7823
IC3	086X0189-001	IC Vert Output UPC1378
⚠★IC4	086X0188-001	Regulator IC STR3123

TRANSFORMERS AND COILS

Ref. No.	Part No.	Description
★L1	009A2854-001	Coil Width-TODAI
★L2	009A2855-001	Coil Lin–TODAI
⚠★T1	053X0528-001	Transf Flyback
T2	052X0131-001	Transf-Horiz Driver

MISCELLANEOUS

Ref. No.	Part No.	Description
⚠ F1	016X0176-001	Fuse 1.5A SB
	016X0182-001	Fuse Clip
P1	006A0428-001	Plug Header
P2	006A0428-001	Plug Header
P3	006A0427-001	Plug 2 Pin
P4	006A0406-001	Plug 4-Pin OSHIMA
P6	006A0429-005	Plug Header
J202	013X1243-001	Cable Assy 4 Wire 350mm

GENERAL REPLACEMENT PARTS LIST

For all K7000 models except where noted.

This monitor contains circuits and components included specifically for safety purposes.

For continued protection no changes should be made to the original design, and components shown in shaded areas of schematic, or ⚠★ on parts list should be replaced with exact factory replacement parts.

The use of substitute parts may create a shock, fire, radiation or other hazard. Service should be performed by qualified personnel only.

P447 MAIN BOARD

RESISTORS

Ref. No.	Part No.	Description
R1	340X2562-934	5.6K Ohm 5% 0.25W
R2	340X2562-934	5.6K Ohm 5% 0.25W
R3	340X2562-934	5.6K Ohm 5% 0.25W
R4	340X2472-934	4.7K Ohm 5% 0.25W
R5	340X2472-934	4.7K Ohm 5% 0.25W
R6	340X2472-934	4.7K Ohm 5% 0.25W
R7	340X2333-934	33K Ohm 5% 0.25
R8	340X2333-934	33K Ohm 5% 0.25
R9	340X2333-934	33K Ohm 5% 0.25
R10	340X2151-934	150 Ohm 5% 0.25W
R11	340X2151-934	150 Ohm 5% 0.25W
R12	340X2151-934	150 Ohm 5% 0.25W
R13	340X2102-934	1.0K Ohm 5% 0.25W
R14	340X2102-934	1.0K Ohm 5% 0.25W
R15	340X2102-934	1.0K Ohm 5% 0.25W
R16	340X2822-934	8.2K Ohm 5% 0.25W
R17	340X2822-934	8.2K Ohm 5% 0.25W
R18	340X2152-934	1.5K Ohm 5% 0.25W
R19	340X2103-934	10K Ohm 5% 0.25W
R20	340X2102-934	1.0K Ohm 5% 0.25W
R21	340X2563-934	56K Ohm 5% 0.25W
R22	340X2562-934	5.6K Ohm 5% 0.25W
R23	340X2102-934	1.0K Ohm 5% 0.25W
R24	340X2224-934	220K Ohm 5% 0.25W
R25	340X2273-934	27K Ohm 5% 0.25W
R26	340X2822-934	8.2K Ohm 5% 0.25W
R27	340X2223-934	22K Ohm 5% 0.25W
R28	340X2332-934	3.3K Ohm 5% 0.25W
R29	340X2103-934	10K Ohm 5% 0.25W
R30	340X2101-934	100 Ohm 5% 0.25W
R31	340X2101-934	100 Ohm 5% 0.25W
R32	340X2101-934	100 Ohm 5% 0.25W
R33	340X2102-934	1.0K Ohm 5% 0.25W
R34	340X2102-934	1.0K Ohm 5% 0.25W
R35	340X2102-934	1.0K Ohm 5% 0.25W
R36	340X2122-934	1.2K Ohm 5% 0.25W
R37	340X2822-934	8.2K Ohm 5% 0.25W
R38	340X2122-934	1.2K Ohm 5% 0.25W
R39	340X2122-934	1.2K Ohm 5% 0.25W
R40	340X2102-934	1.0K Ohm 5% 0.25W
R41	340X2102-934	1.0K Ohm 5% 0.25W
R42	340X2473-934	47K Ohm 5% 0.25W
R43	340X2222-934	2.2K Ohm 5% 0.25W
R44	340X2104-934	100K Ohm 5% 0.25W
R45	340X2104-934	100K Ohm 5% 0.25W
R46	340X2101-934	100 Ohm 5% 0.25W
R47	340X2101-934	100 Ohm 5% 0.25W
R48	340X2102-934	1.0K Ohm 5% 0.25W
R49	340X2102-934	1.0K Ohm 5% 0.25W
R50	340X2103-934	10K Ohm 5% 0.25W
R51	340X2103-934	10K Ohm 5% 0.25W
R52	340X2102-934	1.0K Ohm 5% 0.25W
R53	340X2151-934	150 Ohm 5% 0.25W
R54	340X2224-934	220K Ohm 5% 0.25W
R55	340X2101-934	100 Ohm 5% 0.25W
R56	340X2472-934	4.7K Ohm 5% 0.25W
R57	340X2182-934	1.8K Ohm 5% 0.25W
R58	340X2123-934	12K Ohm 5% 0.25W

RESISTORS (Cont.)

Ref. No.	Part No.	Description
R59	340X2103-934	10K Ohm 5% 0.25W
R60	340X2563-934	56K Ohm 5% 0.25W
R61	340X2332-934	3.3K Ohm 5% 0.25W
R62	340X2122-934	1.2K Ohm 5% 0.25W
R63	340X2563-934	56K Ohm 5% 0.25W
R64	340X2184-934	180K Ohm 5% 0.25W
R65	340X2123-934	12K Ohm 5% 0.25W
R66	340X2224-934	220K Ohm 5% 0.25W
R67	340X2623-934	62K Ohm 5% 0.25W
R68	340X2223-934	22K Ohm 5% 0.25W
R69	340X3683-231	68K 5% 0.5W CAR
R70	340X2682-934	6.8K Ohm 5% 0.25
R71	340X3473-234	47K 5% 0.5W
R72	340X2101-934	100 Ohm 5% 0.25W
R73	340X2103-934	10K Ohm 5% 0.25W
R74	340X2220-934	22 Ohm 5% 0.25W
R75	340X2222-934	2.2K Ohm 5% 0.25W
R76	340X2473-934	47K Ohm 5% 0.25W
R77	340X2333-934	33K Ohm 5% 0.25
R78	340X2102-934	1.0K Ohm 5% 0.25W
R80	340X3056-934	5.6 5% 0.5W
R81	340X2150-934	15 Ohm 5% 0.25W
R82	340X3821-934	820 Ohm 5% 0.5W
R83	340X3681-934	680 Ohm 5% 0.5W
R84	340X2682-934	6.8K Ohm 5% 0.25
R85	340X2332-934	3.3K Ohm 5% 0.25W
R86	340X2224-934	220K Ohm 5% 0.25W
R87	340X3334-844	330K 10% 0.5W
R88	340X4182-633	1.8K 5% 1W
★R89	043X0476-002	3.9K 5% 5W MO
R90	043X0486-002	1.2 5% 2W MF
R91	043X0486-002	1.2 5% 2W MF
R92	043X0486-002	1.2 5% 2W MF
R93	420X5102-324	1.0K 5% 2W
R94	340X2473-934	47K Ohm 5% 0.25W
R95	340X2473-934	47K Ohm 5% 0.25W
R96	420X6182-325	1.8K Ohm 5% 3W, WW
R97	420X6271-325	270 5% 3W
R98	340X4222-633	2.2K Ohm 5% 1W
R99	340X4222-633	2.2K Ohm 5% 1W
R100	340X4271-633	270 5% 1W
R101	420X6682-325	6.8K 5% 3W
R102	340X4470-633	47 5% 1W
⚠★R103	043X0483-001	2.7 Ohm 5% 7W
R104	043X0484-001	15 Ohm 5% 5W
R105	043X0485-001	Thermister
R106	340X2273-934	27K Ohm 5% 0.25W
R107	340X2102-934	1.0K Ohm 5% 0.25W
R301	043X0481-003	220 Ohm 15W WW
VR1	040X0653-002	CTRL 500
VR2	040X0653-005	CTRL 10K
VR3	040X0653-005	CTRL 10K
VR4	040X0653-001	CTRL 200
VR5	040X0653-006	CTRL 200K
VR6	040X0653-003	CTRL 2K
VR7	040X0653-005	CTRL 10K
★VR8	040X0639-006	Trim Pot 2K Ohm 0.3W
VR9	040X0655-001	Trim Pot 200 Ohm

REPLACEMENT PARTS LIST

P456 NECK BOARD (used with CRT's with a 22.5mm neck diameter)

RESISTORS

Ref. No.	Part No.	Description
R201	340X2272-934	Res 2.7K Ohm 5% 0.25W
R202	340X2151-934	Res 150 Ohm 5% 0.25W
R203	340X2272-934	Res 2.7K Ohm 5% 0.25W
R204	340X2151-934	Res 150 Ohm 5% 0.25W
R205	340X2272-934	Res 2.7K Ohm 5% 0.25W
R206	340X2151-934	Res 150 Ohm 5% 0.25W
R207	340X5682-633	Res 6.8K 2W MO
R208	340X5682-633	Res 6.8K 2W MO
R209	340X5682-633	Res 6.8K 2W MO
R210	340X3272-244	Res 2.7K Ohm 10% 0.5W
R211	340X3272-244	Res 2.7K Ohm 10% 0.5W
R212	340X3272-244	Res 2.7K Ohm 10% 0.5W
R213	340X5689-333	Res .68 Ohm 5% 2W
VR201	040X0653-003	CTRL 2K
VR202	040X0653-001	CTRL 200
VR203	040X0653-003	CTRL 2K
VR204	040X0653-001	CTRL 200
VR205	040X0653-003	CTRL 2K
VR206	040X0653-001	CTRL 200

CAPACITORS

Ref. No.	Part No.	Description
C201	080X0090-006	Cap 470PF 10% Z5F CER
C202	080X0099-006	Cap 470PF 10% Z5F CER
C203	080X0099-006	Cap 470PF 10% Z5F CER
C204	080X0099-221	C Disc .01 10% Y5P 500V
C205	080X0099-225	C Disc .0015 1.5KV

SEMICONDUCTORS

Ref. No.	Part No.	Description
Q201	086X0184-001	TRSTR 2SC2068LB/LBBK
Q202	086X0184-001	TRSTR 2SC2068LB/LBBK
Q203	086X0184-001	TRSTR 2SC2068LB/LBBK

MISCELLANEOUS

Ref. No.	Part No.	Description
P202	006A0429-005	Plug Header
SKT201	003A0636-001	Pix Socket
J6	013X1243-001	Cable Assy 4 Wire 350mm
	030X0797-001	Plug V Pin

P448 NECK BOARD (Used with CRT's with a 29mm neck diameter)

Same as P456 NECK BOARD except:

SKT201	003A0651-001	SOC CRT

FINAL ASSEMBLY PARTS

	Ref. No.	Part No.	Description
		9K7700 SERIES (9")	
⚠★		88X0218-506	CRT Toshiba A23JAN99X
★		9A2865-001	Deflection Yoke
		2A0690-001	Purity & Convergence Ring Assembly
		9A2864-001	Degaussing Coil Assembly
		8X0378-001	Rubber Wedge
		13K7800 SERIES (13")	
⚠★		88X0236-506	CRT Orion A34JLL00X
★		9A2860-001	Deflection Yoke
		2A0690-001	Purity & Convergence Ring Assembly
		9A2856-001	Degaussing Coil Assembly
		8X0378-001	Rubber Wedge
		19K7600 and 19K7900 SERIES (19")	
⚠★		88X0237-506	CRT Philips MVA48ABK05X
★		9A2862-001	Deflection Yoke
		2A0690-001	Purity & Convergence Ring Assembly
		9A2857-001	Degaussing Coil Assembly
		208X2400-901	Rubber Wedge